

CoolGaN™ Integrated Power Stage (IPS) for high power density charger/adapter designs

Thomas Beer
Senior Director Strategic System Application CoolGAN™ IPS
Virtual Power Conference, 4-6 May 2021

Infineon

CoolGaN™ product portfolio: simple to drive and easy-to-use; From flexible discrete to application specific IPS system solutions

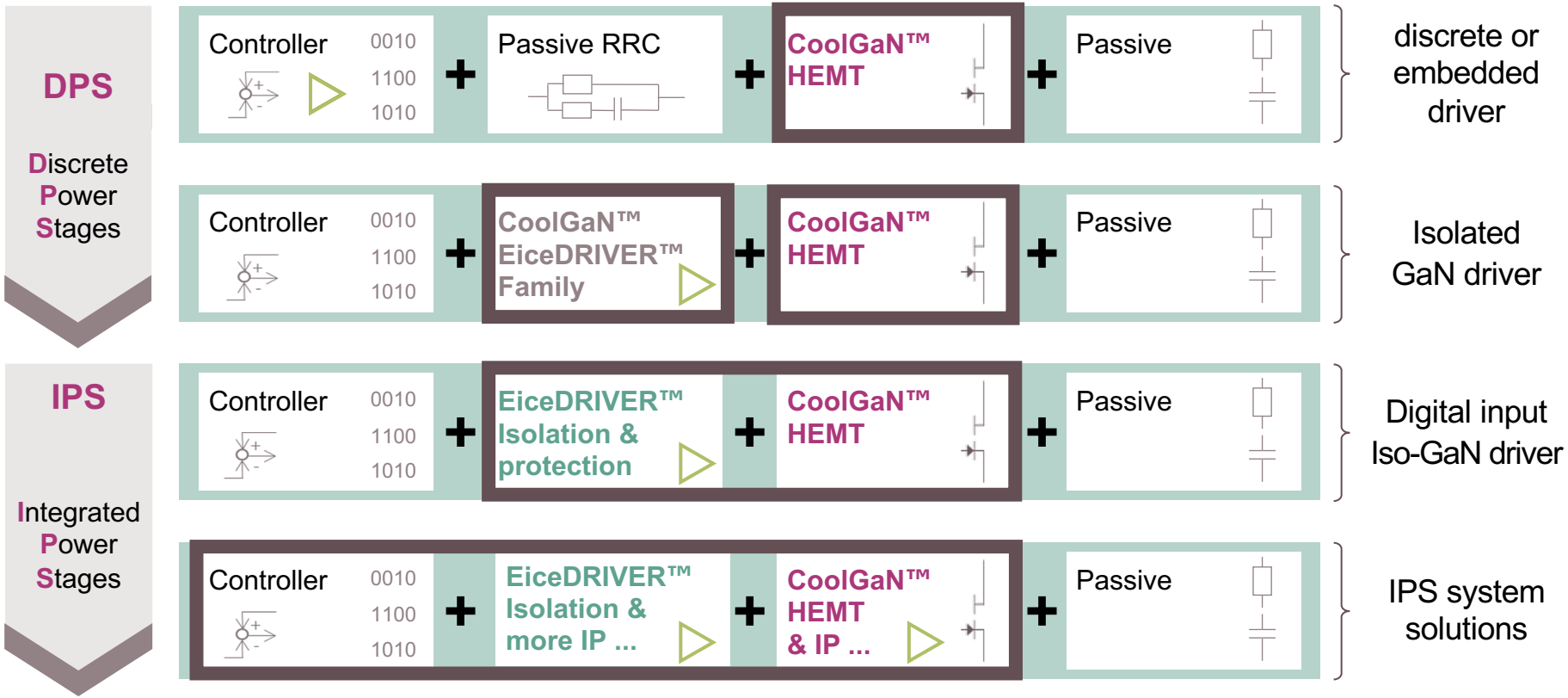

Copyright © Infineon Technologies AG 2021. All rights reserved.

CoolGaN™ input and simple driving use an RRC combination in case of classic and embedded gate drivers

Normally off pGate GaN-HEMT equivalent circuit and gate input characteristic

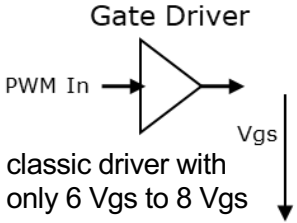

How can we connect this?

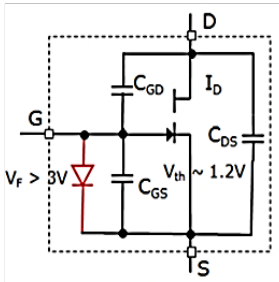

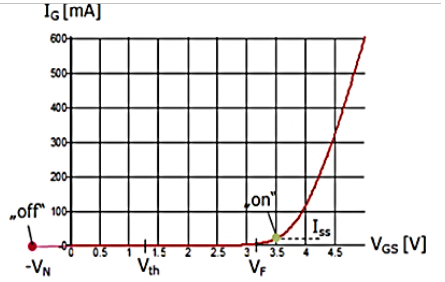

Infineon pGate and normaly off GaN HEMT provide...

- very robust input gate structure for high power
- fast dv/dt switching due to diode behavior → saves external BOM of Zener-diodes on protecting gate input
- 20 – 25% better $R_{DS(on)}$ performance as power derating from T_a to T_{jmax} factor x1,9 in GaN vs. x2,4 Silicon
- excellent robustness with 750 V transient immunity in GaN against transients, surge pulse or over voltages vs. Silicon MOSFETS with "hard" avalanche EOS, but may lead to "soft" long term product life degradation

Copyright © Infineon Technologies AG 2021. All rights reserved.

CoolGaN™ discrete power product family with simple to use passive RRC or dedicated isolated gate drive

Product portfolio for 600 V CoolGaN™ discrete with 750 V transient immunity

Discrete CoolGaN™ HEMTs product portfolio							
Datasheet $R_{DS(on,max)}$ [mΩ]	**$R_{DS(on,typ)}$ [mΩ]**	**600 V** with 750 V transient immunity					
		TOLT	TOLL	DSO TSC	DSO BSC	DFN 8x8mm	ThinPak 5x6
							
340	270		X			X	X
260	200		X			X	X
190	140	X	X			X	X
70	55	X	X	X	X	X	
42	32	X	X	X	X		

X – Productive or samples available

X – In development (please ask for more information)

New package family types $R_{DS(on)}$ extensions are in development

$R_{DS(on)}$ in discrete product name are provided by max. production value and T_a=25°C

Copyright © Infineon Technologies AG 2021. All rights reserved.

CoolGaN™ Integrated Power Stage IPS family with digital PWM input, dv/dt control, fast timing accurate and robust

High power

Medium power

Low power

CoolGaN™ IPS Single channel

- Isolated digital input
- fast timing accurate build in gate driver
- Source & sink dv/dt control
- CoolGaN™ 600 V
- $ID_{Typ\ Tc=Ta}$ 10.0 A

SMPS power stages from 100 W up to ~1 kW*
(*max P. **with heatsink**, typ. soft & hard switching H2,H4 in LLC, TP-PFC)

IGI60F0014A1M
1x 140 mΩ
1x 200 mΩ
in 8x8 mm PG-iQFN-21x

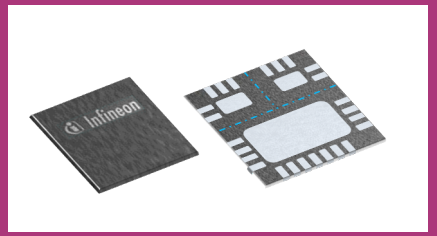

CoolGaN™ IPS Half-bridge

- Isolated digital input
- fast timing accurate build in gate driver
- Single R_g dv/dt control for on off
- CoolGaN™ 600 V
- $ID_{Typ\ Tc=Ta}$ 10.0 A

UHD-USB-PD chargers/adapters 25 W up to ~250 W*
(*with heatsink, typ. soft switching H2, H4 in AC-FB, ASHB-FB, LLC)

IGI60F1414A1L
2x 140 mΩ
2x 260 mΩ
in 8x8 mm PG-iQFN-28x

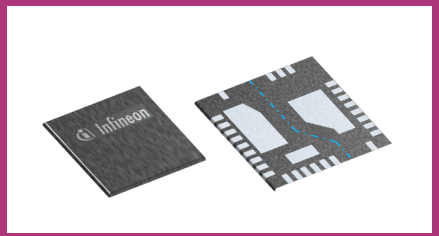

Copyright © Infineon Technologies AG 2021. All rights reserved.

CoolGaN™ Integrated Power Stage family with digital PWM input, dv/dt control, fast timing accurate and robust

Product portfolio for 600 V CoolGaN™ IPS with 750 V transient immunity

$R_{DS(on,max.)}$ [mΩ]	Datasheet $R_{DS(on,typ.)}$ [mΩ]	QFN 8x8 half-bridge 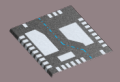	QFN 8x8 Single 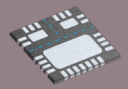
650	**500**	X	
340	**270**	X	X
260	**200**	X	X
190	**140**	X	X
130	**100**		X

X – Productive or samples available
X – In development (please ask for more information)

Embedded fast timing accurate 150 V/ns CMTI and isolated driving and reliable 600 V CoolGAN™ HEMT

Simple to interface 3.3 V digital PWM input logic level and bootstrap capable high side

Advantage of CoolGaN™ switching-FOMs combined with smallest switching node parasitic for lower EMI

Simple RRC-combintion to configure dv/dt gate control (R_{source}, R_{sink} turn on/turn off in single channel)

Propagation delay matched over temperature and production spread for minimum dead times = best eff.

New package family types $R_{DS(on)}$ extensions are in development
$R_{DS(on)}$ in IPS product name are provided at typ. production value and T_a=25°C

Copyright © Infineon Technologies AG 2021. All rights reserved.

CoolGaN™ IPS single channel for medium power 100W to 1kW*
Key customer benefits: package designed for higher power & density

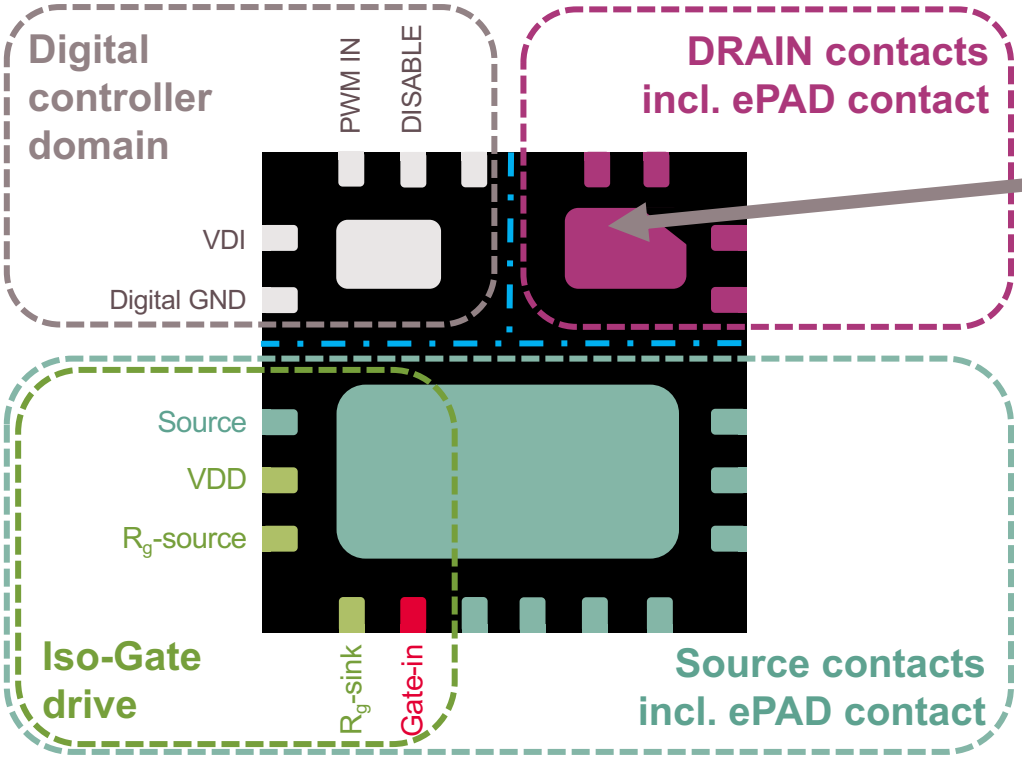

IGI60F0014A1M (140 mΩ typ.)

Unique drain ePAD for
max. current and
best electrical performance

Functional grouping and orthogonal pin orientation
for simplicity to design
smallest PCB layout
with good thermal performance
+ Rg Source Rg Sink control



Bottom side view of package

* with Heat Sink;

Copyright © Infineon Technologies AG 2021. All rights reserved.

CoolGaN™ IPS single channel for medium power 100W to 1kW* inv half-bridge configuration on the PCB with minimal noise interference...

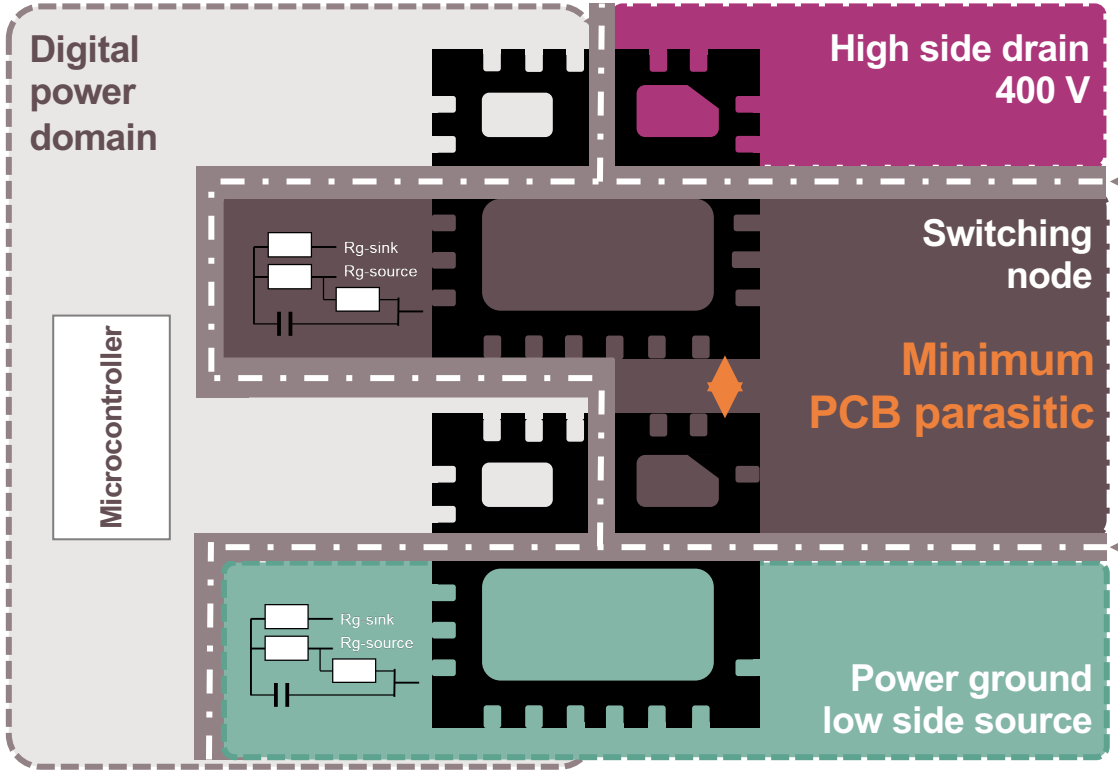

Visualization of PCB isolation paths and power domains

IGI60F0014A1M (140 mΩ typ.)

Creepage isolation:
1.9 mm (on PCB min. 1.8 mm)

Use power-islanding PCB design technique

Minimum interference to digital power domain; safe off

Keep HV switching noise local

Smaller EMI due to truly galvanic isolated gate drivers

Copyright © Infineon Technologies AG 2021. All rights reserved.

CoolGaN™ IPS half-bridge in One IC for low power USB-PD <150W
Key customer benefits: digital PWM Inputs, simple integration

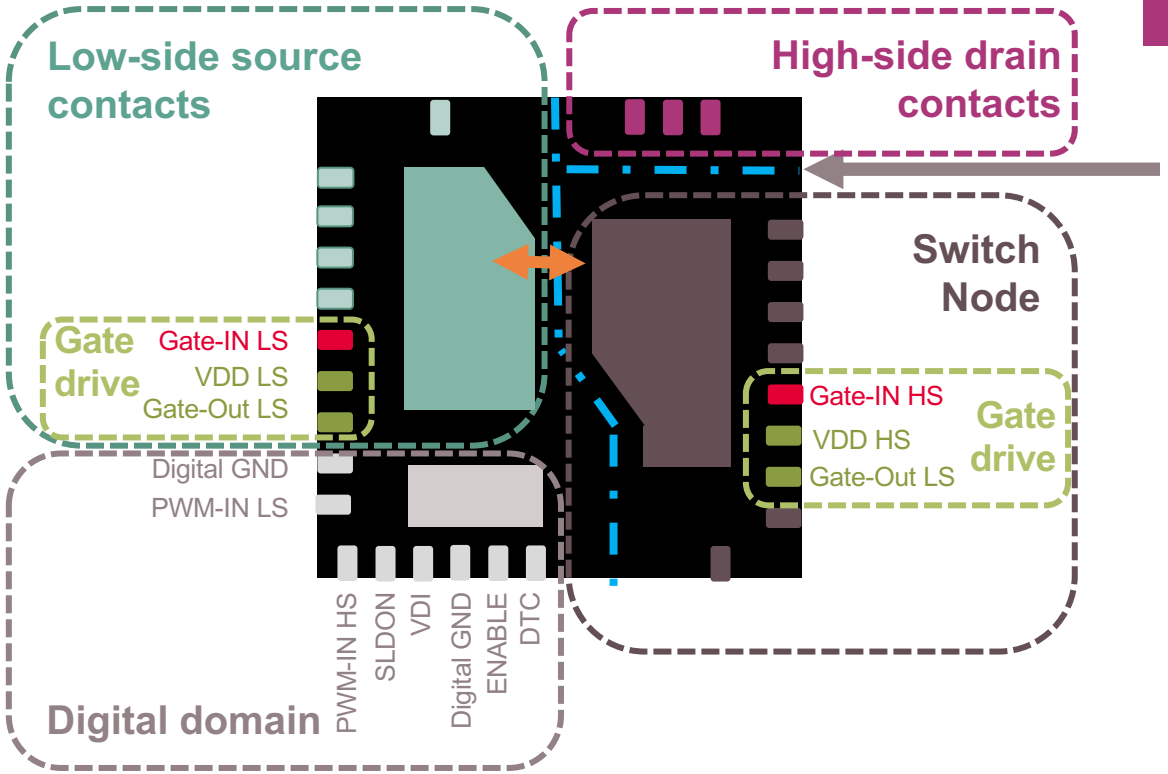

IGI60F1414A1L (2x140 mΩ typ.)

Galvanic isolated
600 V half-bridge with
1.6 mm creepage Ch2Ch, Viso

Minimum EMI & switch node parasitic bond wire inside package

Smallest PCB footprint with just low external BOM

Copyright © Infineon Technologies AG 2021. All rights reserved.

CoolGaN™ IPS half-bridge in one IC for low power 15W to 65W
Key customer benefits: package designed PCB area U

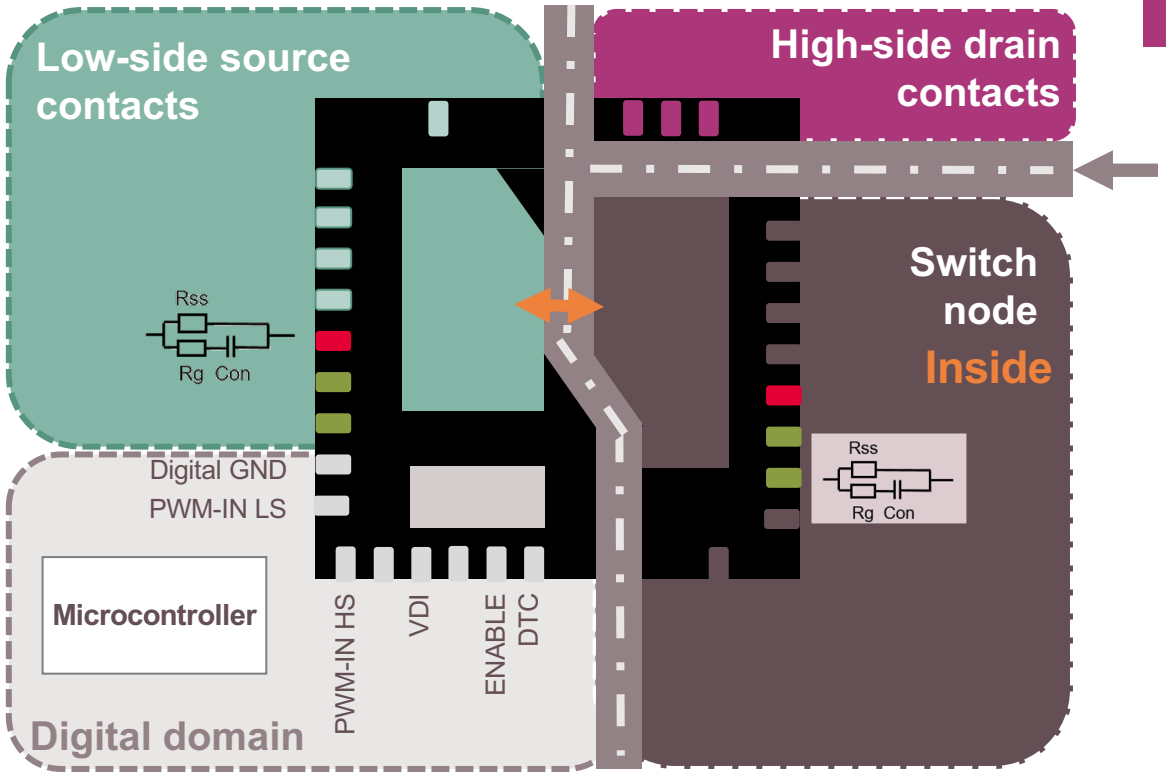

IGI60F1414A1L (2x140 mΩ typ.)

Galvanic isolated
600 V half-bridge with
1.6 mm creepage Ch2Ch, Viso

**Minimum EMI &
switch node parasitic
bond wire inside package**

**Smallest PCB footprint
with just low external BOM**

Copyright © Infineon Technologies AG 2021. All rights reserved.

Universal* USB PD 65 W charger power density vs. preferred power topologies

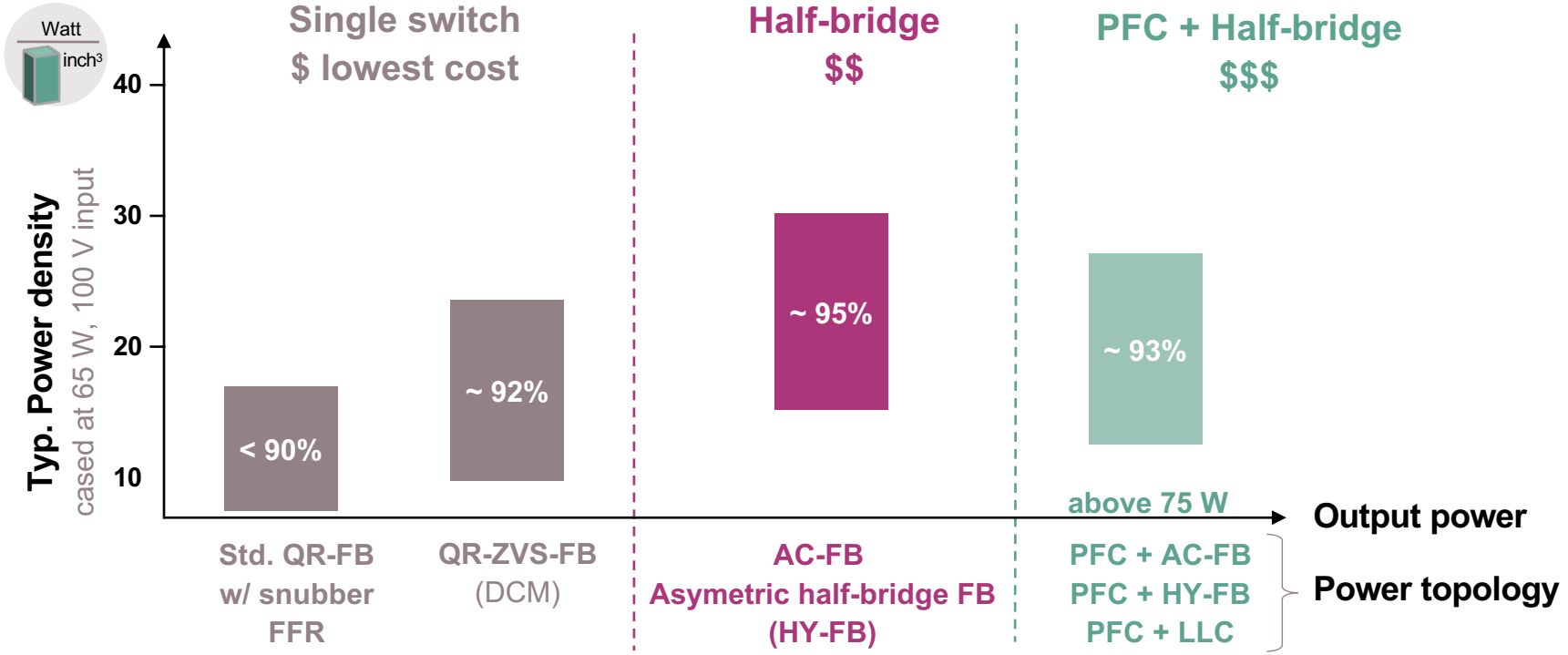

*Universal charger with sustained output power at high or low line

Copyright © Infineon Technologies AG 2021. All rights reserved.

Achieving high density charger integration
Pareto optimization can be used with multiple input variables

Trading efficiency vs. power density vs. thermal limit vs. cost

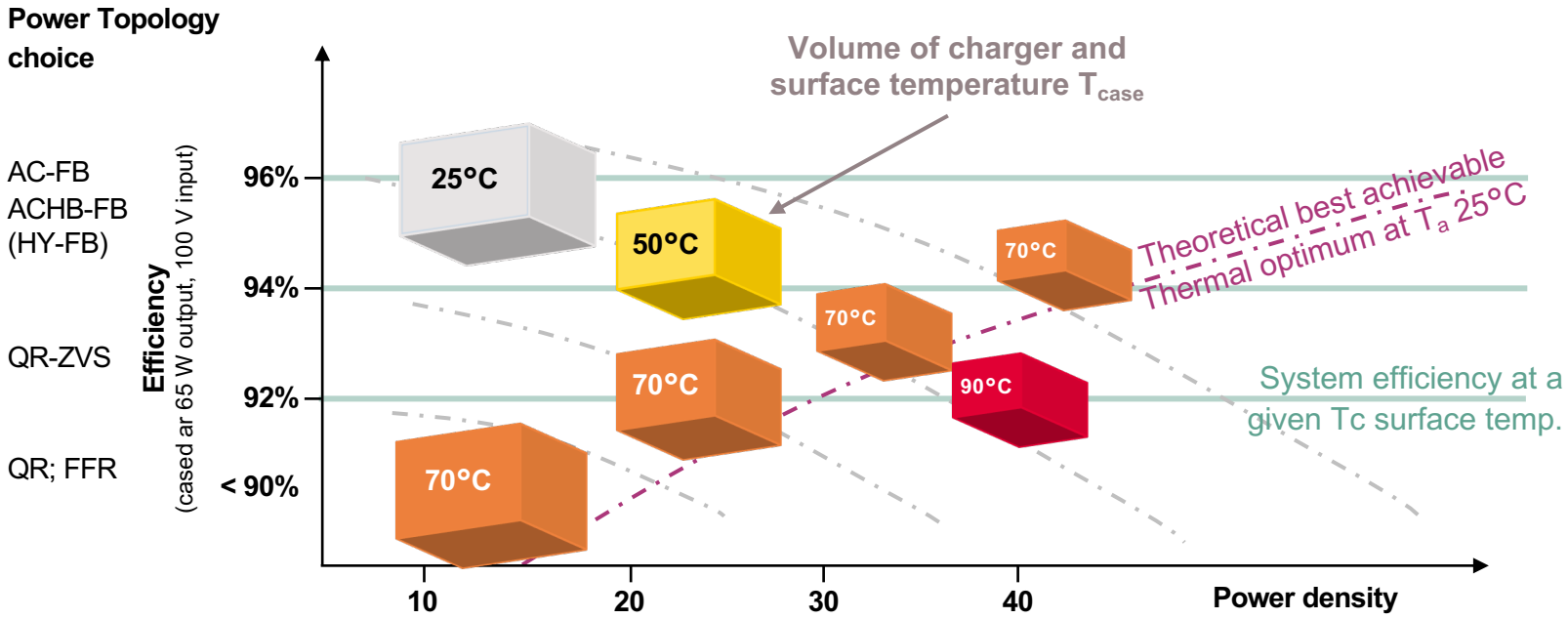

Please note: Calculated curves and examples with different power switches in different Topologies are available in Infineon´s WBG-2021 online conference or can be send on request.

Copyright © Infineon Technologies AG 2021. All rights reserved.

2-chip QR-FB solutions based on PAG1P+S chipsets incl. USB-link controller. Ref. designs scale from 18 W to 65 W USB-chargers

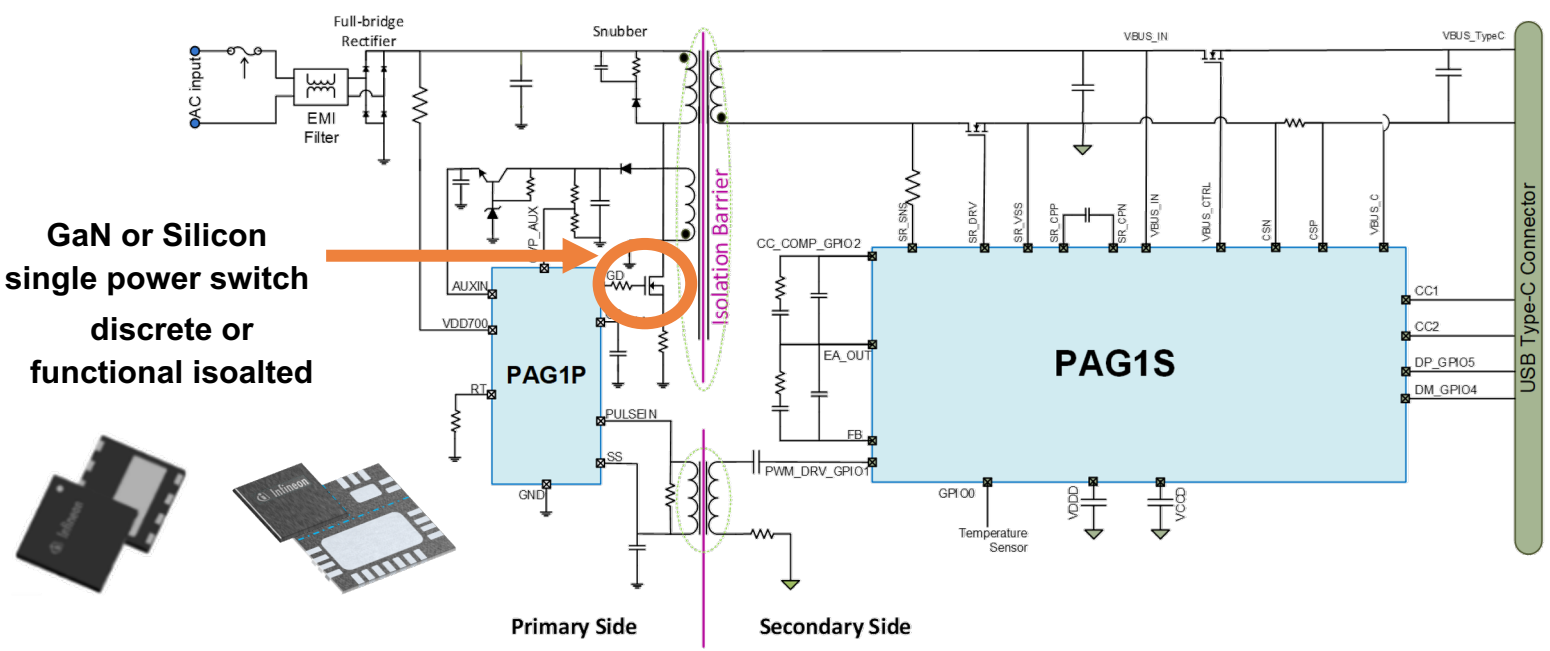

- Secondary side controlled capable of QR-FB/DCM with typ. efficiencies of up to 92%
- Very low charger standby power < 30 mW up to 45 W; < 45 mW to 65 mW across all power levels

Copyright © Infineon Technologies AG 2021. All rights reserved.

2-chip QR-FB USB PD 20 W to 65 W solution based on PAG1P+S with CoolMOS™ or in development with* IGI6019 CoolGaN™

Parameter	18/20 W (QR, CM)	33 W (QR, DCM)	45 W (QR, DCM)	65 W (QR, DCM)
Dimension [mm]	55x36x21	60x35x20	43x37.5x30.2	52x42x22
Primary FET/ CoolGAN™	IPS70R900P7S	IPA70R600P7S	GaN - TP65H070LSG	IPL60R185C7/ *IGI6019 in development
Power density [W/inch^3]	7.8 (20 W)	12.9	15.15	22.16
Standby power [mW] (@ 230 V_{ac})	25	25	30	47
COC power	Pass	Pass	Pass	Pass
Peak efficiency	89.27%	91.22%	91.67%	91.77%
Protection	OVP, UVP,OCP, SCP, OTP	OVP, UVP,OCP, SCP, OTP	OVP, UVP,OCP, SCP, OTP	OVP, UVP,OCP, SCP, OTP
CE/RE passing	CE/RE[1]	CE*[2]	CE	CE
Release date	Available[2]	Available	Available	Available

[1] CE: Conducted Emission; RE: Radiated Emission / [2] CE 65 W solution to become available in Q2 2021



Copyright © Infineon Technologies AG 2021. All rights reserved.

2-chip QR-FB USB PD 20 W to 65 W solution based on PAG1P+S with CoolMOS™ or in development with* IGI6019 CoolGaN™

Parameter	18/20 W (QR, CM)	33 W (QR, DCM)	45 W (QR, DCM)	65 W (QR, DCM)
Dimension [mm]	55x36x21	60x35x20	43x37.5x30.2	52x42x22
Primary FET/ CoolGAN™	IPS70R900P7S	IPA70R600P7S	GaN - TP65H070LSG	IPL60R185C7/ *IGI6019 in development
Power density [W/inch³]	7.8 (20 W)	12.9	15.15	22.16
Standby power [mW] (@ 230 V_{ac})	25	25	30	47
COC power	Pass	Pass	Pass	Pass
Peak efficiency	89.27%	91.22%	91.67%	91.77%
Protection	OVP, UVP,OCP, SCP, OTP	OVP, UVP,OCP, SCP, OTP	OVP, UVP,OCP, SCP, OTP	OVP, UVP,OCP, SCP, OTP
CE/RE passing	CE/RE[1]	CE*[2]	CE	CE
Release date	Available[2]	Available	Available	Available

[1] CE: Conducted Emission; RE: Radiated Emission / [2] CE 65 W solution to become available in Q2 2021

+ CYPRESS

Ready for your industrial design targets

Example:

Power density at **same frequency** at **same topology** at **different output power**

Copyright © Infineon Technologies AG 2021. All rights reserved.

For High Density HD universal USB-PD charger/adapter recommended IC is the CoolGaN™ IPS – IGI60F1414A1L

AC-FB
(active clamp flyback)

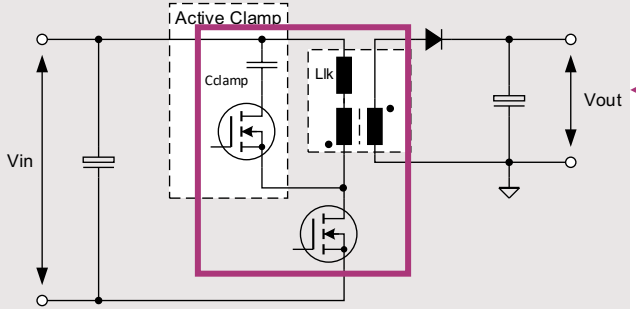



IGI60F1414A1L
(2x 140 mΩ typ.)



ASHB-FB
(asymmetrical resonant half-bridge)

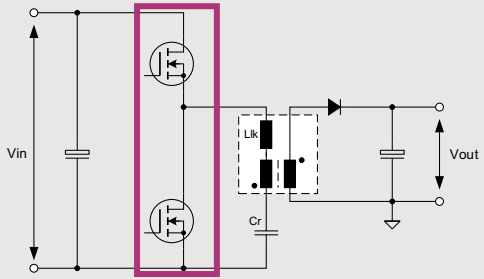

For more details on HFB, refer to article:
https://doi.org/10.3390/electronics7120363

- Both AC-FB and HY-FB topologies run in soft switching and recover the leakage energy which gives them a good 1% efficiency gain vs. single switch topologies
- The HY-FB demo board with Infineon controller as well as an AC-FB with 3rd party controller demo board are planned for release 2H in 2021

Copyright © Infineon Technologies AG 2021. All rights reserved.

Infineon + Cypress

What you can expect

Infineon + CYPRESS EMBEDDED IN TOMORROW™



#1 in Power ICs
#1 in USB ICs

Together to deliver outstanding innovative system solutions and customer service

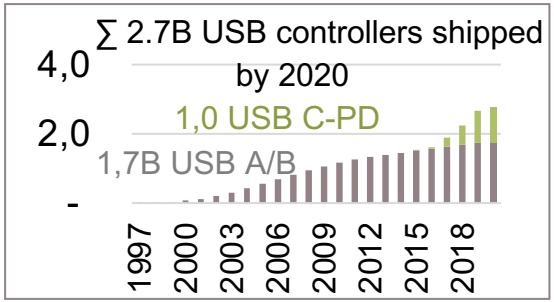

Cypress
Over 15 years of experience in compliant USB-A/B control & interface ICs

Over 5 years of USB-C PD power delivery ICs

Copyright © Infineon Technologies AG 2021. All rights reserved.

CoolGAN™ DPS & IPS products are only one part of a complete USB-PD charger system solution

Primary side	
High voltage switch	
CoolMOS™	› 700 V CoolMOS™ P7 › 600 V CoolMOS™ PFD7
600 V CoolGaN™	› 600 V CoolGaN™ DPS (750 V Tr.) › 600 V CoolGaN™ IPS (750 V Tr.)

Secondary side	
Synchronous rectification and safety switch	
OptiMOS™ PD	› OptiMOS™ PD 30/60/80/100 V logic level › OptiMOS™ PD 120/150 V
CoolGaN™	› CoolGAN™ PD 100 – 200 V (in development)

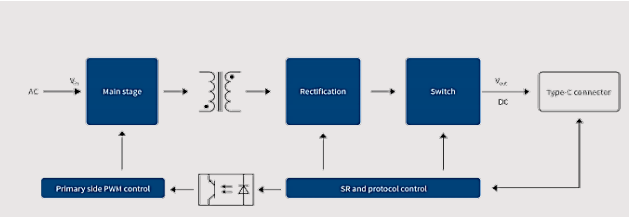

Power Topology & Controller type	
Forced ZVS flyback (FFR)	XDPS21071
Asymmetric resonant half-bridge FB (HY-FB)	XDPS2x to use w/ CoolGAN™ IPS (in development). Silicon available
Quasi resonant FB (QR-ZVS)	**PAG1P** to use w/ CoolMOS™ or CoolGAN™ DPS

Chipsets

Controller type	
PAG1S incl. Sync. Rec. & USB PD Protocol controller	USB 2.0/3.0/3.1, PD, QC 2.0/3.0, AFC, ... **Standalone USB Protocol controllers**

Copyright © Infineon Technologies AG 2021. All rights reserved.

Key takeaways

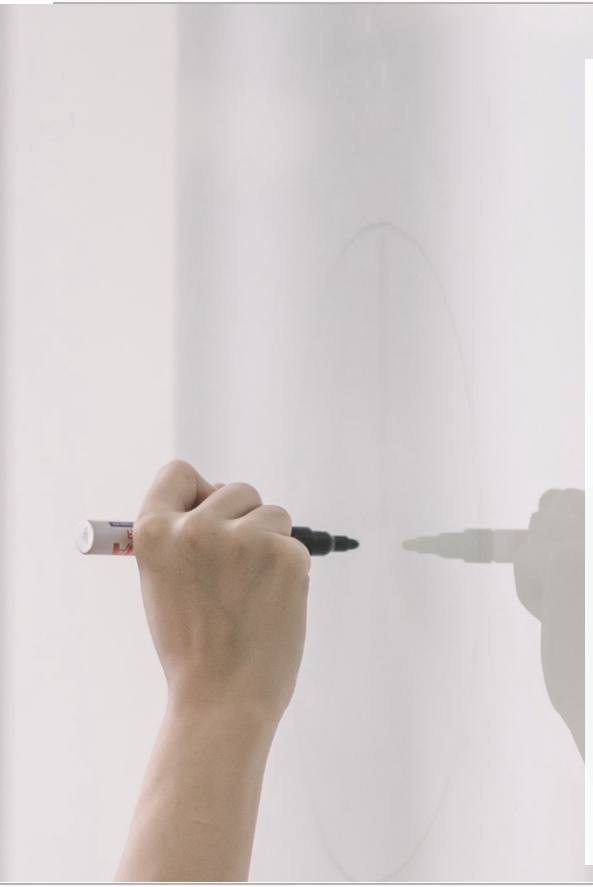

- **CoolGaN™ solutions are flexible to use, simple to drive, robust and easy to use** with different $R_{DS(on)}$, package and gate drive solutions
- Infineon can provide the right power switch technologies of choice CoolGAN™, CoolSiC™, CoolMOS™ and OptiMOS™
- Infineon+Cypress will supply and service the **full spectrum solutions for charger and adapters, including USB Interface controllers + USB-C PD**
- Please find more information on www.Infineon.com/GaN

Stay tuned! More products to come soon...

Copyright © Infineon Technologies AG 2021. All rights reserved.



Part of your life. Part of tomorrow.